FLAGSHIP MARINE, INC.				
REV.	ZONE	DESCRIPTION	DATE	ENG APPROVAL

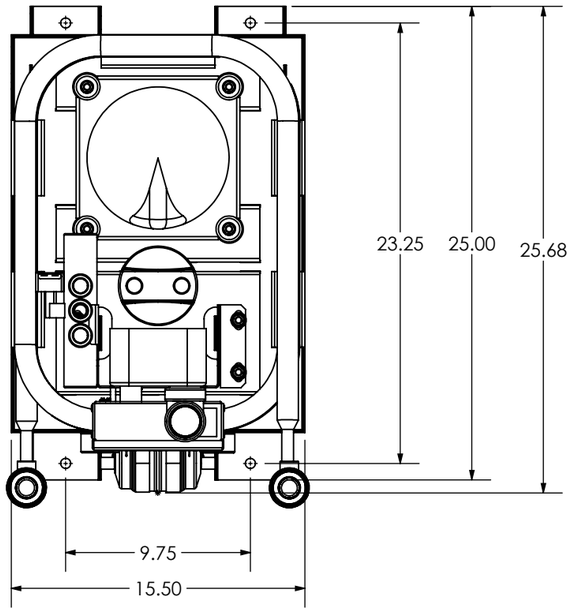

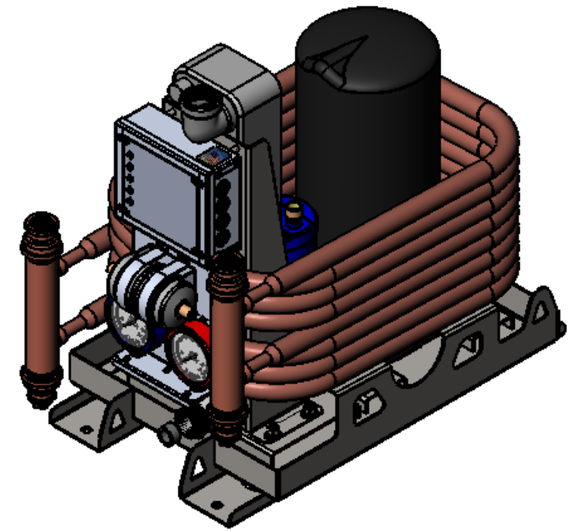

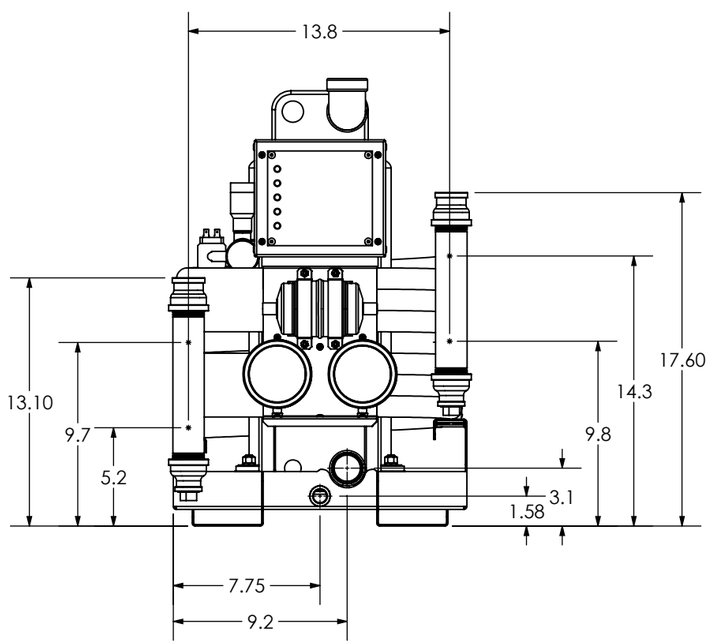

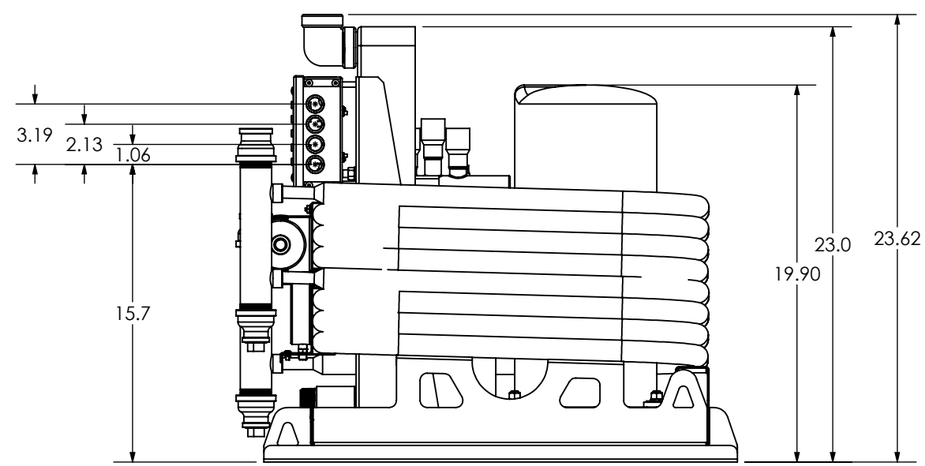

2. PREFERRED LIMITS AND FITS PER ANSI B4.1 (INCHES).

1. DIMENSIONING & TOLERANCING PER ASME Y14.5M.

NOTES:

Flagship Marine

FLAGSHIP MARINE, INC.
2427 SE DIXIE HIGHWAY
STUART | FLORIDA | 34996 | USA
(772) 283-1609 | (800) 316-6426
FAX (772) 283-4611

PROPRIETARY AND CONFIDENTIAL

THIS DOCUMENT CONTAINS INFORMATION PROPRIETARY TO **FLAGSHIP MARINE, INC.** NO PART MAY BE REPRODUCED, USED IN ANY FORM, OR STORED ELECTRONICALLY WITHOUT THE WRITTEN PERMISSION OF **FLAGSHIP MARINE, INC.**

NEXT ASSY	USED ON
-	-
-	-
-	-
-	-
-	-
-	-

APPLICATION

UNLESS OTHERWISE SPECIFIED:
DIMENSIONS ARE IN INCHES
TOLERANCES:
FRACTIONS ± 1/32
ANG: MACH ± 0°30' BEND ± 2°
DECIMALS .XX ± .01
.XXX ± .005
HOLE Ø .XX ± .005

INTERPRET GEOMETRIC TOLERANCING PER: ASME Y14.5M

MATERIAL

FINISH -

DO NOT SCALE DRAWING

	NAME	DATE
DRAWN	SWC	2/4/2011
CHECKED	TCM	-
ENG APPR.	TCM	-
MFG APPR.	TCM	-
Q.A.	EAS	-

PERP ⊥ .003/IN
STRAIGHTNESS — .005/IN
FLATNESS ▱ .005/IN
THREADS:
EXTERNAL - CLASS 2A
INTERNAL - CLASS 2B
MACHINED SURFACES: 63 U.O.S

TITLE: ASSEMBLY, CHILLER, FM60CW, 25L X 15.50W X 23H

PART NO. 20064-001

SIZE	DWG. NO.	REV
B	FM20064	-

OLD PART NO. -

SCALE: 1:8 | WGT: 299.16 LBS | SHEET 1 OF 1